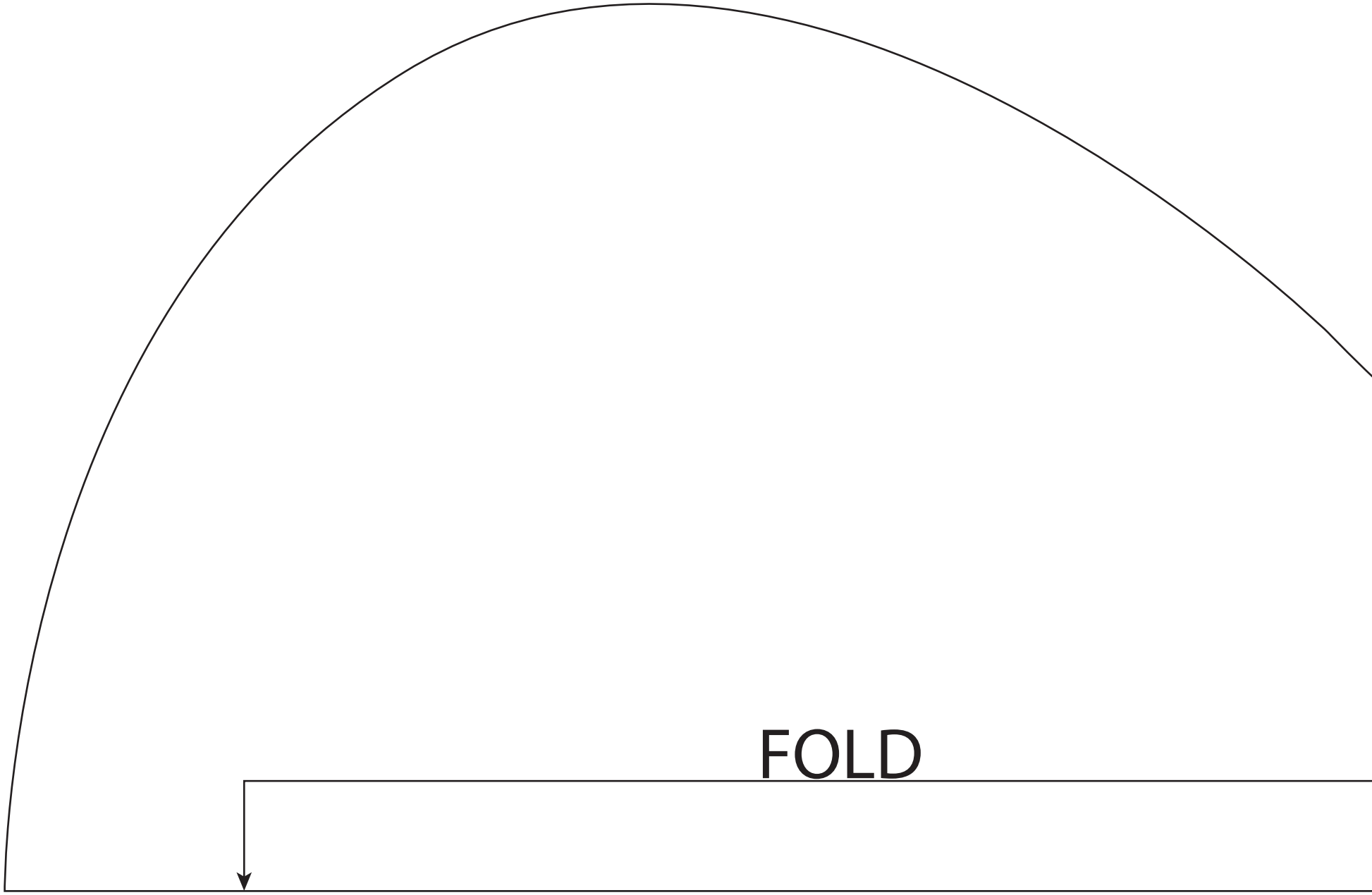
FOLD

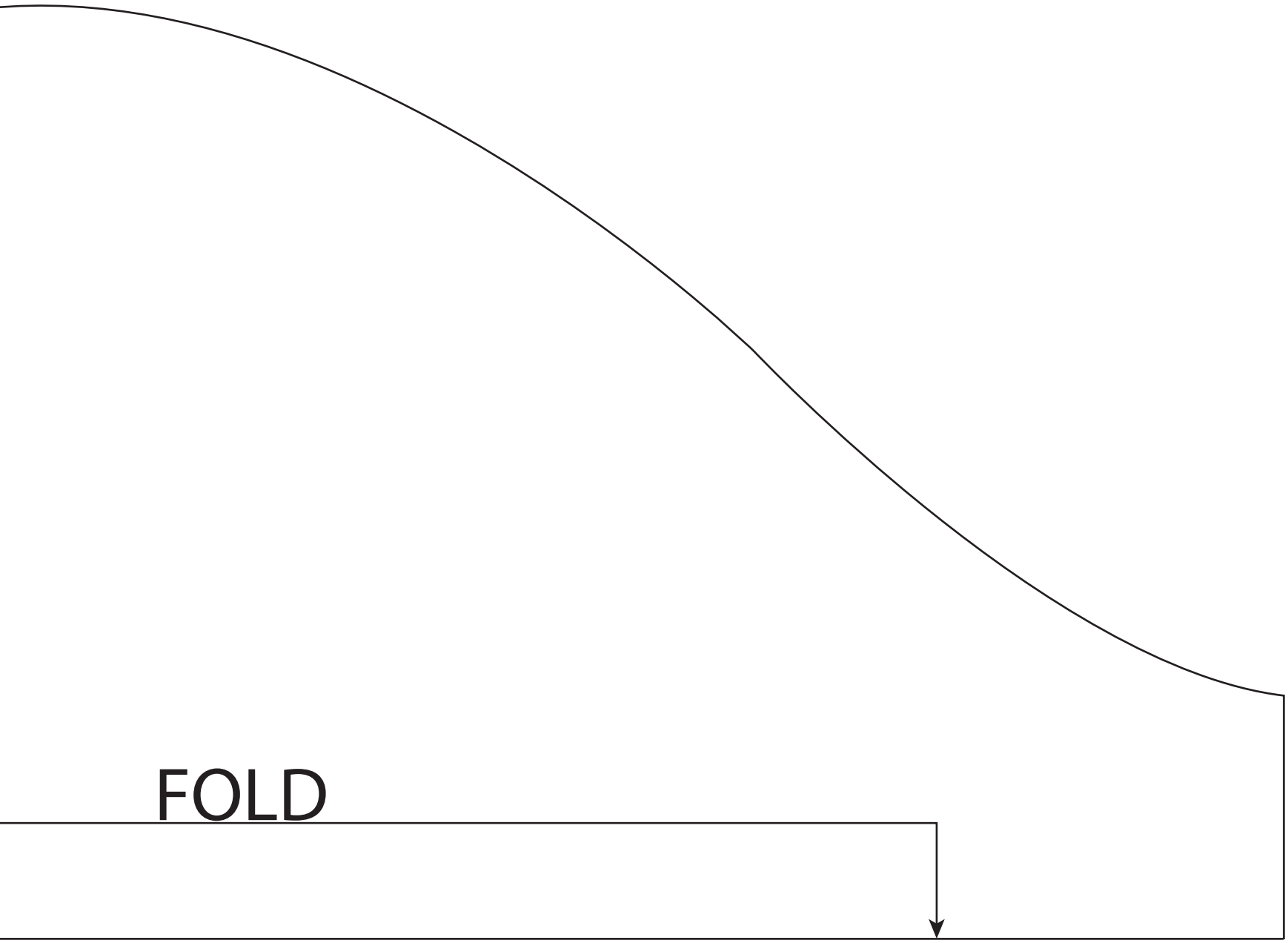
FOLD